ELECTRICAL SPECIFICATION:

Parameters	Value	Note
Input Voltage	4V~36V	
Output Voltage	0.9V~5V	

PROGRAMMING OUTPUT VOLTAGE:

Output Voltage Setting:

The output voltage can be set by a resistive divider from the output to ground. The resistive divider allows the FB pin to sense a fraction of the output voltage as following figure. The output voltage is set according to the following equation where the reference voltage VFB is typical 0.8V.

$$V_{OUT} = \left(1 + \frac{RFB1}{RFB2}\right) \times V_{FB}$$

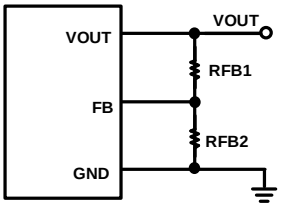

Output Voltage Setting

Output Voltage	5V	3.3V	1.8V
RFB1=	=R4 =105kΩ	=R4//R14 =62.4kΩ	=R4//R15 =25.2kΩ
RFB2=R6	20k	20k	20k

Inductor Peak Current Limit Setting

The current limit of high-side MOSFET switch is adjustable by an external resistor connected to the RLIM pin. The recommended resistor value is ranging from 39kΩ (for typical 4.72A) to 56kΩ (for typical 3.4A). When the inductor current reaches the current limit threshold, the COMP voltage will be clamped to limit the inductor current. Inductor current ripple also should be considered into current limit setting. The current limit value is set according to the following approximate equation:

$$R_{LIM}(k\Omega) = \frac{178.8}{I_{LIM} - 0.2531} - 1$$

EVALUATION BOARD SCHEMATIC:

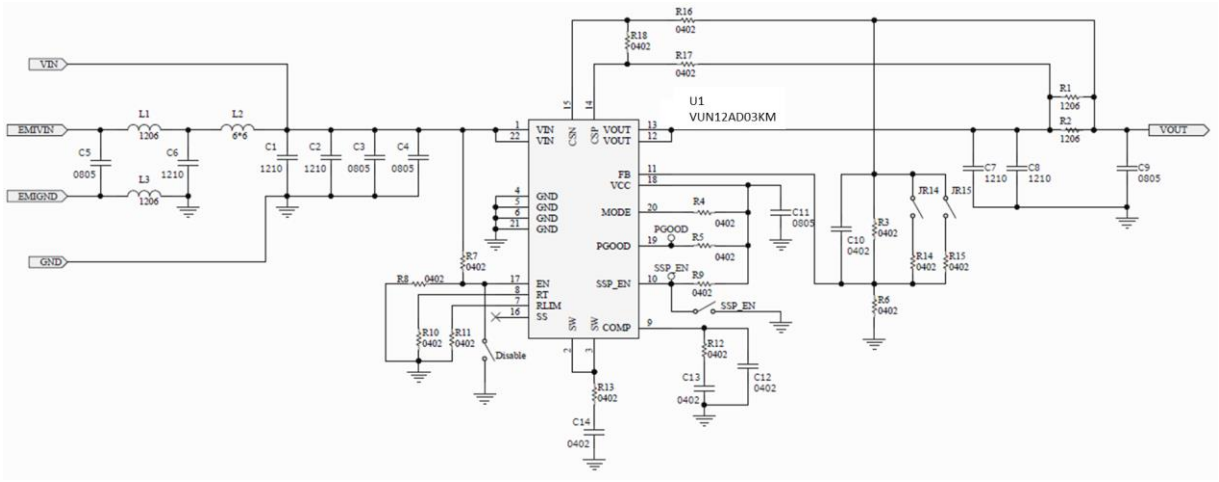

BOM LIST:

Application Condition: with EMI solution

COUNT	REF DES	DESCRIPTION
1	U1	VUN12AD03-KM
1	L2	VCHA054T-100MS6
3	C1, C2, C6	MLCC, 10uF, 50V, X7R, 1210
3	C3, C5, C9	MLCC, 0.1uF, 50V, X7R, 0805
2	C7, C8	MLCC, 22uF, 16V, X7R, 1210
1	C11	MLCC, 10uF, 10V, X7R, 0805
1	C13	MLCC, 10nF, 25V, X7R, 0402
1	C14	MLCC, 470pF, 50V, X7R, 0402
1	R3	RES, 105Kohm, 0402 1%
4	R5, R6, R7, R9	RES, 20Kohm, 0402 1%
1	R10	RES, 120Kohm, 0402 1%
1	R11	RES, 39Kohm, 0402 1%
1	R12	RES, 7.32Kohm, 0402 1%
1	R13	RES, 2ohm, 0402 1%
1	R14	RES, 154Kohm, 0402 1%
1	R15	RES, 33.2Kohm, 0402 1%
2	R4, R18	RES, 0ohm, 0402
1	R1、L1_L3	Short
7	R2, C4, C10, C12, R8, R16, R17	NC

QUICK START GUIDE:

Power on/off

1. Give the Power and Loading to module as following figure
2. Open the Disable jumper to enable module
3. Short the Disable jumper to disable module

Output Voltage Setting

1. VOUT=5V, Open the J_R14 and JR15
2. VOUT=3.3V, Short the jumper J_R14 and Open J_R15
3. VOUT=1.8V, Open the jumper J_R14 and Short J_R15

Frequency Spread Spectrum

1. Open the SSP_EN jumper to enable Frequency Spread Spectrum.
2. Short the SSP_EN jumper to disable Frequency Spread Spectrum.

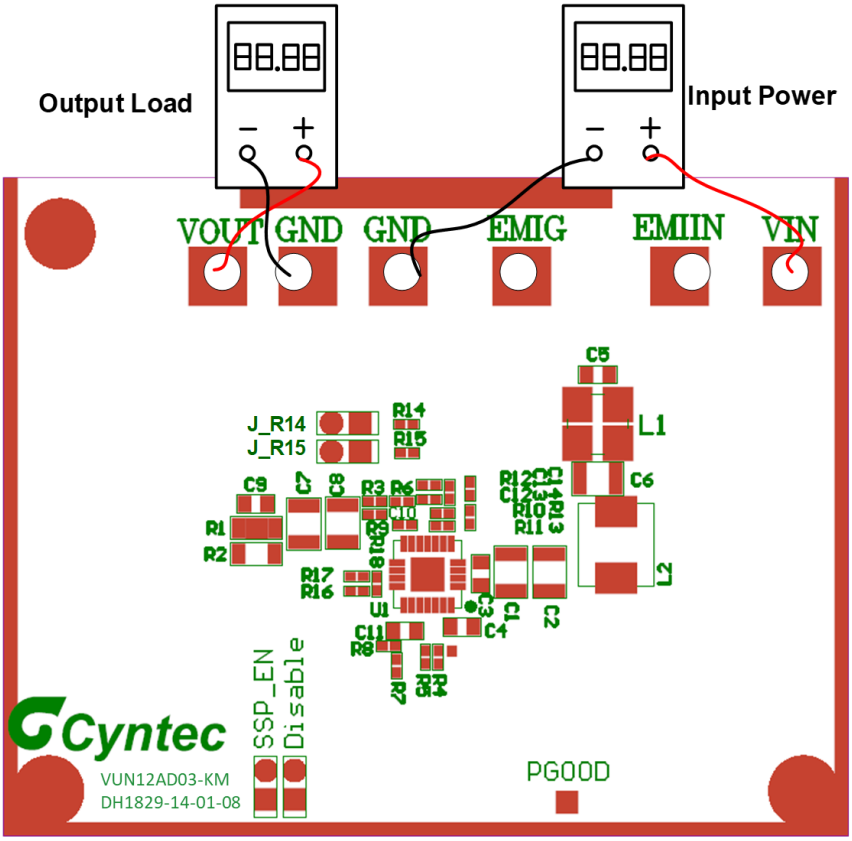

PRIENTED CIRCUIT BOARD LAYOUT:

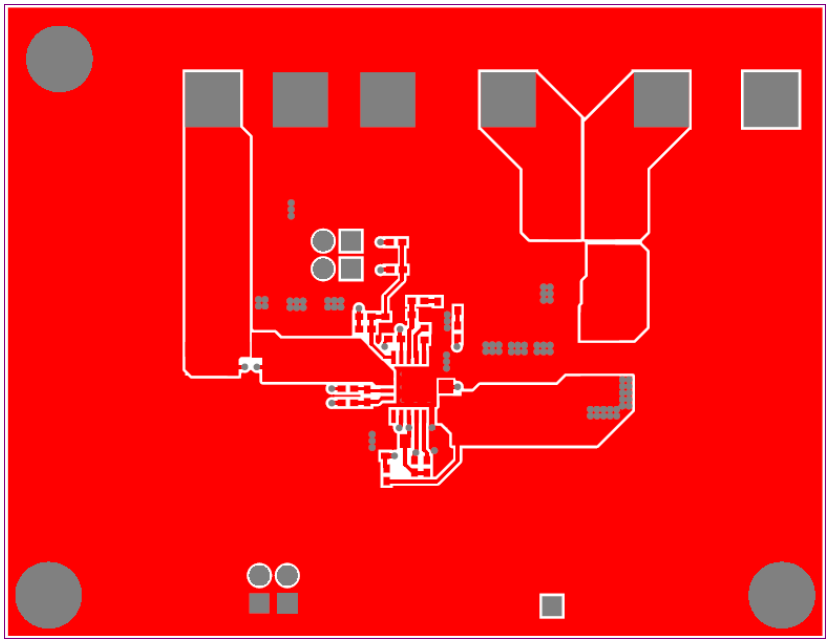

First layer (Top layer)

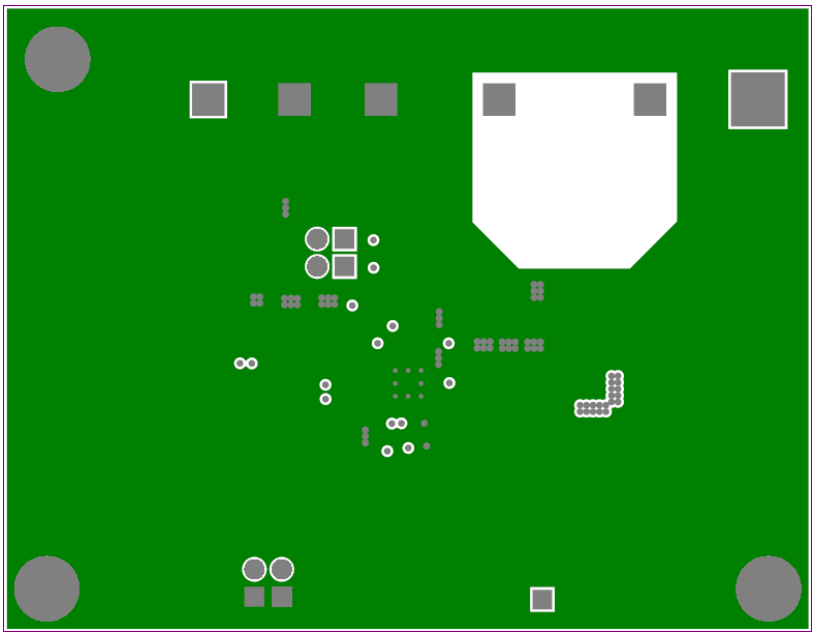

Second layer

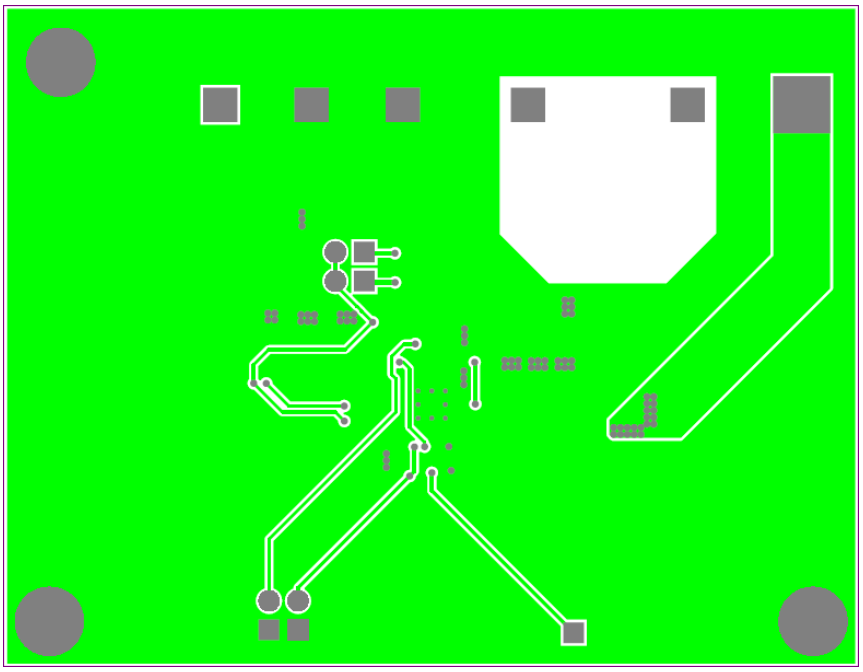

Third layer

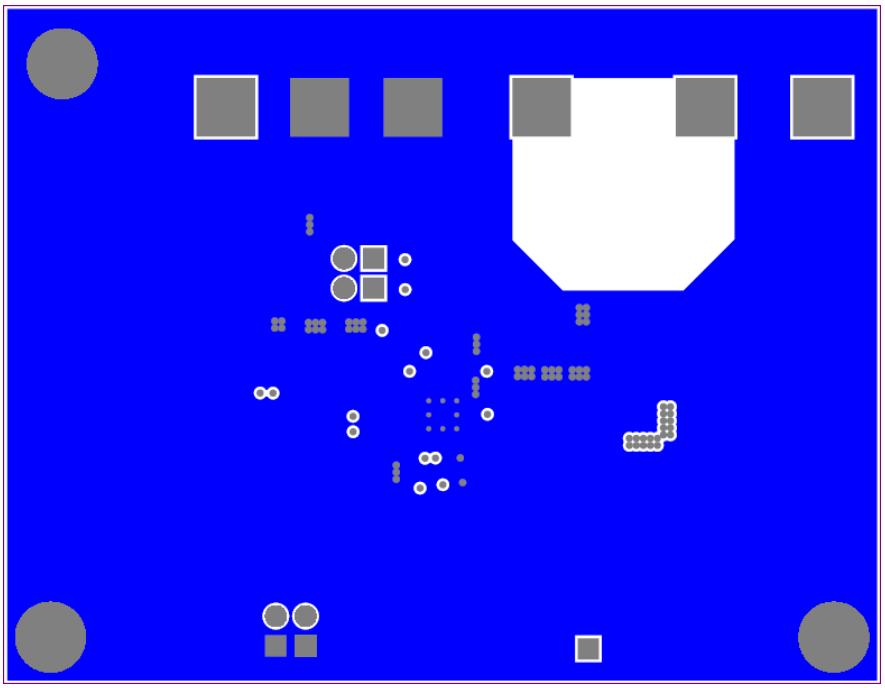

Fourth layer (bottom layer)

REVISION HISTORY:

Date	Revision	Changes
2019.10.23	P00	Release the preliminary EVB guide.
2019.11.12	P01	Modify the BOM component
2021.10.12	P02	Update EVB SCH part number